ORACLE®

ORACLE

Oracle Database on OpenVMS and Oracle Rdb Product Family Update

Kevin Duffy

Senior Director, Software Development

Oracle Rdb and Oracle Database on OpenVMS Engineering

October, 2017

Safe Harbor Statement

The following is intended to outline our general product direction. It is intended for information purposes only, and may not be incorporated into any contract. It is not a commitment to deliver any material, code, or functionality, and should not be relied upon in making purchasing decisions. The development, release, and timing of any features or functionality described for Oracle's products remains at the sole discretion of Oracle.

Copyright © 2017, Oracle and/or its affiliates. All rights reserved. |

Agenda

- Working with VSI and HPE
- Customer Focus
- Oracle Database on VMS Update
  - Support Dates
  - 11g , 10g
  - What's Under Development
  - Roadmap
- Oracle Rdb and CODASYL DBMS Update
  - Support Dates
  - Recent Releases
  - What's Under Development
  - Roadmap

Copyright © 2017, Oracle and/or its affiliates. All rights reserved. |

Working with VSI and HPE

- Oracle remains in close contact with both VSI and HPE
  - In resolution of customer issues
  - Oracle OpenVMS dependencies
  - Development Projects (e.g. Java 1.8)
  - Customer Events
  - Monthly conference calls with HPE
  - As needed communication with VSI (often weekly)
- Participation in EMEA HPUG events, Paris, December, 2017
- Participation in the Connect Conferences – e.g. Hannover, April, 2017
- Monthly meetings with HPE Japan
- Efforts to strengthen working relationships between Oracle/VSI in progress

Copyright © 2017, Oracle and/or its affiliates. All rights reserved. |

Oracle on OpenVMS and Oracle Rdb Marketing Focus

- Focus on meeting our customers' needs
- Rdb Web page, Rdb Web Journal, MetaLink, OTN
- Rdb management personal customer visits /meetings
- Events
  - HPE and VSI Events
  - OpenVMS SIG Groups

- **Partner Events (2017)**
  - Swedish OpenVMS Sig, March 22
  - Connect Deutschland, April 25-27
  - Connect OpenVMS Boot Camp, September 24-27
  - French OpenVMS Sig, December, 2017
- **Oracle Technical Forums (2017)**
  - Nashua, NH, USA, September 28-29
  - Stockholm, Sweden, October 9-10
  - Vienna, Austria, October 12-13
  - London, England, October 16-17
  - Paris, France, October 19-20
  - Utrecht, Netherlands, October 23-24
  - Redwood Shores, USA, November 8-9
  - Sydney, Australia , December 4-5

Copyright © 2017, Oracle and/or its affiliates. All rights reserved. |

Oracle's Lifetime Support Policy

- **Oracle Premier Support** provides customers with maintenance and support of Oracle software on Itanium servers for five years from the general availability date of the software release.
- **Oracle Extended Support** provides customers with an extra three years of support for specific Oracle releases for an additional fee. Customers benefit from the same quality of service received with Oracle Premier Support, with the security of knowing they can migrate their software to a new platform when the time is right.
- **Oracle Sustaining Support** customers will receive technical support for as long as they operate their Itanium-based systems—including access to online support tools, knowledge bases, pre-existing fixes and assistance from technical support experts.
- Oracle Lifetime Support

Copyright © 2017, Oracle and/or its affiliates. All rights reserved. |

Oracle Database 10gR2 Support Dates

Integrity Platforms	
Platform	Additional Extended Support: S1 Fixes Only
HP OpenVMS on Integrity	August 2013 – July 2017
HP OpenVMS on Alpha	August 2013 – July 2015
HP-UX	August 2013 – Dec 2015
Linux Integrity	August 2013 – Dec 2015
Windows Integrity	August 2013 – Dec 2015

Copyright © 2017, Oracle and/or its affiliates. All rights reserved. |

Oracle 11g & 12c Support Dates

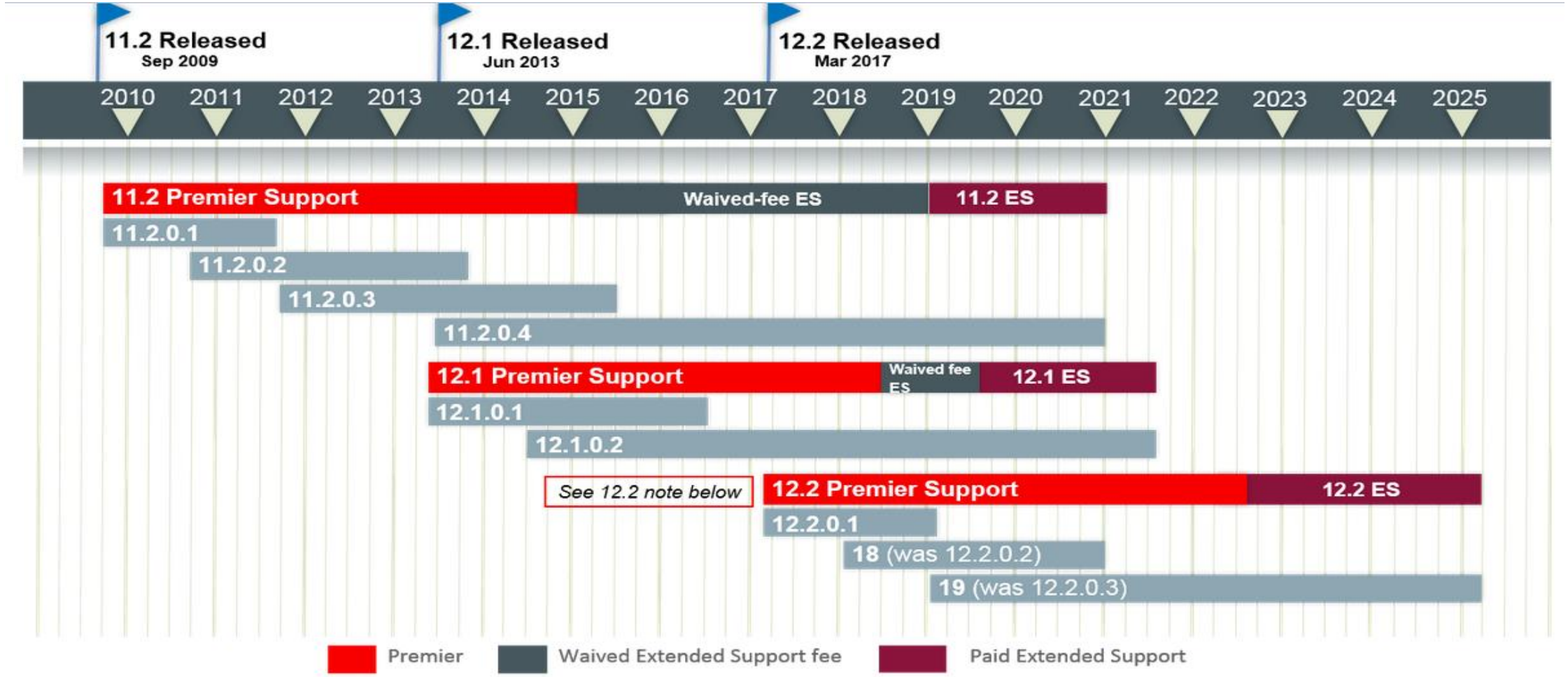

Copyright © 2017, Oracle and/or its affiliates. All rights reserved. |

Oracle 11g OpenVMS Patch Set Updates (PSUs)

- 11.2.0.4.170718DBPSU – July, 2017 , next will be October, 2017
- 11.2.0.4.170418DBPSU – April, 2017
- 11.2.0.4.161018DBPSU - October, 2016
- 11.2.0.4.160719DBPSU - July, 2016
- 11.2.0.4.10 - April, 2016
- 11.2.0.4.9 - January, 2016
- 11.2.0.4.8 - October, 2015
- 11.2.0.4.7 - July, 2015
  - Released on other platforms July, 2015

Copyright © 2017, Oracle and/or its affiliates. All rights reserved. |

11.2.0.4.170718DBPSU on MOS

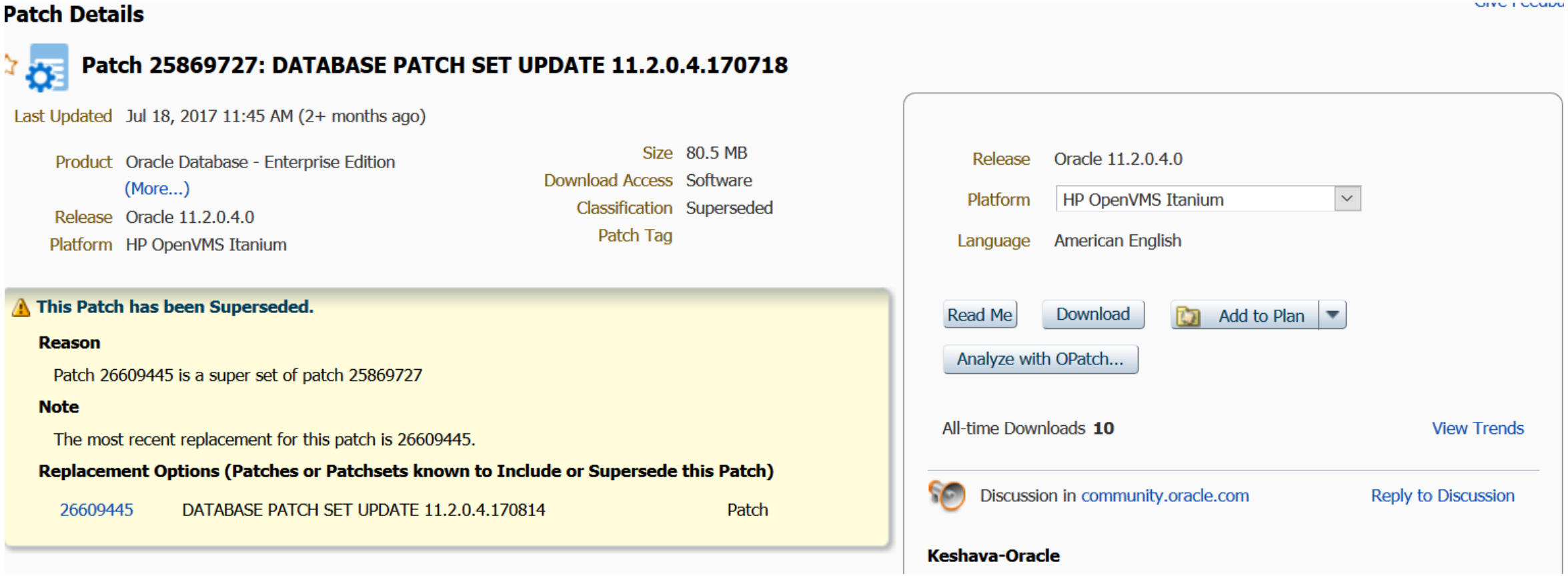

Copyright © 2017, Oracle and/or its affiliates. All rights reserved. |

11g and 10g Certifications on VSI OpenVMS Versions (cont.)

- Itanium (i4 and i2)
  - 8.4-2L1
  - 8.4-2
  - 8.4-1H1
- Alpha (Oracle Rdb Only)
  - 8.4-2L1
  - 8.4-2L2 (optimized for EV56 and higher)
    - Certification completed

Copyright © 2017, Oracle and/or its affiliates. All rights reserved. |

Itanium OpenVMS Certification Matrix (Doc ID 377470.1)

Support Matrix for hp ITANIUM OpenVMS versions and Oracle Server releases

Last Update: 13-June-2016
Updated by: Johan Buijser

ITANIUM/OpenVMS (Refer to Note:377480.1 for recommended OpenVMS ECO levels)

8.2-1	8.3	8.3-1H1	8.4	8.4-1H1	8.4-2	8.4-2L1
			**see Note A	**see Note B	**see Note B	**see Note B
			11.2.0.4.0	11.2.0.4.0	11.2.0.4.0	11.2.0.4.0
			**see Note C			
			10.2.0.5.0	10.2.0.5.0	10.2.0.5.0	10.2.0.5.0
			**see Note D			
10.2.0.4.0	10.2.0.4.0	10.2.0.4.0	10.2.0.4.0			
10.2.0.2.0	10.2.0.2.0	10.2.0.2.0				
	**see Note E					

(For hp ALPHA OpenVMS Certification matrix - see Note:62150.1)

Copyright © 2017, Oracle and/or its affiliates. All rights reserved. |

Alpha OpenVMS Certification Matrix (Doc ID 62150.1)

ALPHA/OpenVMS (Refer to Note:170199.1 for recommended OpenVMS ECO levels)

7.1	7.2	7.3	8.2	8.3	8.4
		** see Note L	** see Note M		
					10.2.0.5.0
					** see Note A
			10.2.0.4.0	10.2.0.4.0	10.2.0.4.0
			10.2.0.2.0	10.2.0.2.0	
			** see Note B		
		10.1.0.5.0	10.1.0.5.0	10.1.0.5.0	
		10.1.0.3.0	10.1.0.3.0	10.1.0.3.0	
			** see Note C		

Copyright © 2017, Oracle and/or its affiliates. All rights reserved. |

Oracle 11g on OpenVMS – Current Development

- RAC
  - Code merge phase completed
  - Run-time phase underway
    - Issue:
      - Multicast Domain Name server which come from the Apple/Bonjour
      - Routing socket CRTL support needed from within the TCP/IP package
      - Multicasting capability needed through the tcpip$interface APIs
        - Berkley BSD or Netlink API

Copyright © 2017, Oracle and/or its affiliates. All rights reserved. |

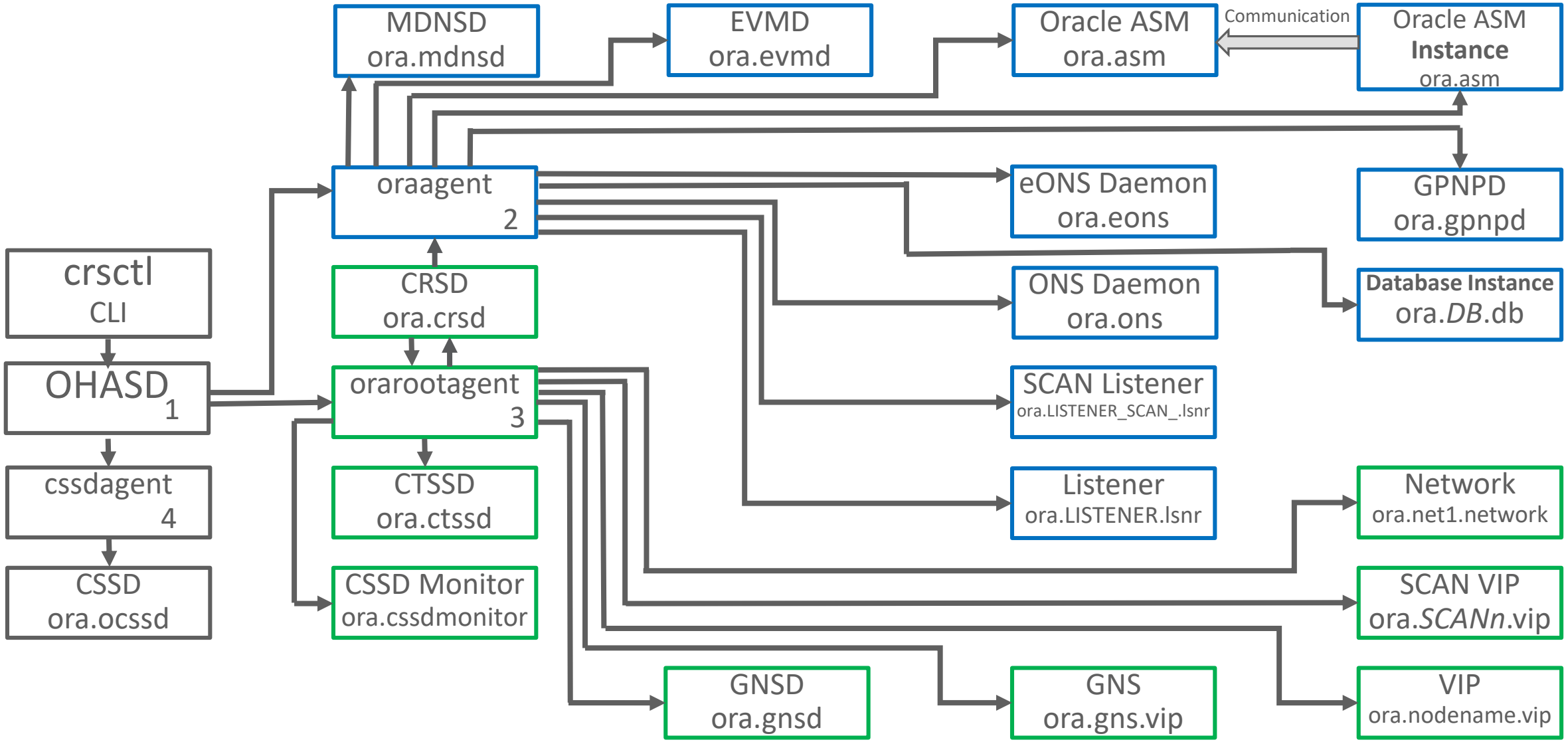

Copyright © 2017, Oracle and/or its affiliates. All rights reserved. |

What Oracle 11g Client Kit Provide to OpenVMS

- Client/Server Interoperability Support to future database releases
- Standard Supported client tools (next slides)
- Upgraded Security Functionality
- Gives you the ability to continue to run your application on VMS while connecting to the database server platform of your choice (either to a VMS server or to other platforms supported by Oracle).

Copyright © 2017, Oracle and/or its affiliates. All rights reserved. |

Client / Server / Interoperability Support Matrix For Different Oracle Versions [ID 207303.1]

Client Version	Server Version						
	12.2.0 #10	12.1.0	11.2.0	11.1.0	10.2.0	10.1.0	9.2.0
12.2.0	Yes	Yes	Yes	No	No	No #3	No #3
12.1.0	Yes	Yes	Yes	Was	MDS #7	No #3	No #3
11.2.0	Yes #9	Yes	Yes	Was	MDS #7	No	Was #5
11.1.0	No	Was	Was	Was	Was #7	Was #6	Was #5
10.2.0	No	MDS #7	MDS #7	Was #7	MDS	Was	Was #5
10.1.0 #4	No	No	Was #6	Was #6	Was	Was	Was
9.2.0	No	No #8	Was #5	Was #5	Was #5	Was	Was

Key:

Yes	Supported
ES	Supported but fixes only possible for customers with Extended Support .
LES or MDS	Supported but fixes only possible for customer with a valid Limited Extended Support or Market-Driven Support contract respectively.
Was	Was a supported combination but one of the releases is no longer covered by any of Premier Support, Primary Error Correct support, Extended Support, nor Extended Maintenance Support. Fixes are no longer possible.
No	Has never been Supported

Copyright © 2017, Oracle and/or its affiliates. All rights reserved. |

11g Client Kit Contents

- Oracle SQLJ
- Oracle Database Utilities
- Oracle Java Client
- SQL*Plus
- Oracle JDBC/THIN Interfaces
- Oracle Internet Directory Client
- Oracle Call Interface (OCI)
- Oracle Programmer
- Oracle XML Development Kit
- Oracle Advanced Security
- Enterprise Manager Minimal Integration
- OLAP Analytic Workspace Manager and Worksheet
- Oracle Net

Copyright © 2017, Oracle and/or its affiliates. All rights reserved. |

11g Client Kit Contents (cont.)

- Oracle Connection Manager
- Oracle Net Listener
- Oracle Multimedia Client Option
- Oracle ODBC Driver
- Oracle Clusterware High Availability API
- Oracle SQL Developer
- Oracle Scheduler Agent
- Oracle Services For Microsoft Transaction Server
- Oracle Administration Assistant for Windows
- Oracle Counters for Windows Performance Monitor
- Oracle Objects for OLE
- Oracle Provider for OLE DB
- Oracle Data Provider for .NET
- Oracle Providers for ASP.NET

Copyright © 2017, Oracle and/or its affiliates. All rights reserved. |

Oracle Rdb Update

Copyright © 2017, Oracle and/or its affiliates. All rights reserved. |

Rdb Product Family Lifetime Support Dates

Oracle Rdb and Oracle CODASYL Database Releases

Release	GA Date	Premier Support Ends	Extended Support Ends	Sustaining Support Ends
7.0	Oct 1996	Aug 2007	Aug 2009	Indefinite
7.1	Jul 2001	Dec 2007	Dec 2010	Indefinite
7.2	Jan 2006	Jul 2015	Jul 2017	Indefinite
7.3	Mar 2011	Sep 2018	Sep 2021	Indefinite

See: http://www.oracle.com/us/support/library/lifetime-support-technology-069183.pdf

Copyright © 2017, Oracle and/or its affiliates. All rights reserved. |

Oracle Rdb Certifications

Oracle Rdb V7.3

Release	Release Date	Version	Alpha			Itanium			Update
			Min	Max	Kits [1]	Min	Max	Processor	
7.3.2.1	Mar 2017	V7.3-210	8.4	8.4-x	.1	8.4	8.4-2L1	i4	
7.3.2.0	Mar 2016	V7.3-200	8.4	8.4-x	.1	8.4	8.4-2L1	i4	3
7.3.1.3	Oct 2015	V7.3-130	8.3	8.4-x	.1	8.3	8.4-2L1	i4	1
7.3.1.2	Oct 2014	V7.3-120	8.3	8.4-x	.1	8.3	8.4-1H1	Tukwila	2
7.3.1.1	Feb 2014	V7.3-110	8.3	8.4-x	.1	8.2-1	8.4	Tukwila	1
7.3.1.0	Sep 2013	V7.3-100	8.3	8.4-x	.1	8.2-1	8.4	Tukwila	None

Rdb V7.3 is in premier support.

[1]The ALPHA version is optimized for EV56 or later processors and shown as V7.3-nn1. Older, pre-EV56 processors are not supported.

Source: Comprehensive Rdb Versions and Compatibility Matrix (MOS Doc ID 66729.1)

Copyright © 2017, Oracle and/or its affiliates. All rights reserved. |

Oracle Rdb Certifications (cont.)

Update Kits

Update kits contain urgent patches. Each contains the patches from any earlier ones. They are not full kits and must be applied on top of the release they are for. The kits contain the updates for all platforms, so the Itanium patch will also work for Alpha.

Update 2 for Rdb 7.3.2.1 Alpha:	26820751
Update 2 for Rdb 7.3.2.1 I64:	26820763
Update 1 for Rdb 7.3.2.1 Alpha:	26273393
Update 1 for Rdb 7.3.2.1 I64:	26273409

Source: Comprehensive Rdb Versions and Compatibility Matrix (MOS Doc ID 66729.1)

Copyright © 2017, Oracle and/or its affiliates. All rights reserved. |

Oracle Rdb Certifications (cont.)

Oracle Rdb V7.2

Release	Release Date	Version	Alpha			Itanium			Update
			Min	Max	Kits [1]	Min	Max	Processor	
7.2.5.8	May 2017	V7.2-580	8.2	8.4-x	.0 / .1	8.2-1	8.4-1H1	i2	None
7.2.5.7	Aug 2015	V7.2-570	8.2	8.4-x	.0 / .1	8.2-1	8.4-1H1	Tukwila	None
7.2.5.6	Apr 2015	V7.2-560	8.2	8.4-x	.0 / .1	8.2-1	8.4-1H1	Tukwila	None
7.2.5.5	Jun 2014	V7.2-550	8.2	8.4-x	.0 / .1	8.2-1	8.4	Tukwila	None
7.2.5.4	Feb 2014	V7.2-540	8.2	8.4-x	.0 / .1	8.2-1	8.4	Tukwila	None
7.2.5.3	July 2013	V7.2-530	8.2	8.4-x	.0 / .1	8.2-1	8.4	Tukwila	None

Source: Comprehensive Rdb Versions and Compatibility Matrix (MOS Doc ID 66729.1)

Copyright © 2017, Oracle and/or its affiliates. All rights reserved. |

Oracle CODASYL DBMS Certifications

Oracle CODASYL DBMS V7.3

Release	Release Date	Version	Alpha			Itanium			Update
			Min	Max	Kits [1]	Min	Max	Processor	
7.3.1	Nov 2013	V7.3-10	8.3	8.4-2L1	8.3/8.4-2L1	8.3	8.4-2L1	i4	

DBMS V7.3 is in premier support

Source: Comprehensive Rdb Versions and Compatibility Matrix (MOS Doc ID 66767.1)

Copyright © 2017, Oracle and/or its affiliates. All rights reserved. |

Rdb Product Family Releases Over the Past 2 Years

- Rdb 7.3.2.1, Update 2, September, 2017
- Oracle JDBC for Rdb 7.3.5, August, 2017
- Rdb Connectivity Management, 7.3.2.0, August, 2017
- Rdb 7.3.2.1, Update 1, June, 2017
- Rdb 7.2.5.8, May, 2017
- Oracle Rdb ODBC 3.3.2.5 , April, 2017
- Rdb 7.3.2.1, March , 2017
- SQL/Services 7.3.2.3, March, 2017
- Rdb 7.3.2, Update 4, March, 2017
- Rdb 7.3.2, Update 3, November, 2016
- Rdb 7.3.2, Update 2, September, 2016
- RMU Reference Manual, September, 2016
- SQL Reference Manual, September, 2016
- Rdb 7.3.2, Update 1, May, 2016
- SQL/Services 7.3.2.2, April, 2016
- Rdb 7.3.2, March, 2016
- Oracle JDBC for Rdb 7.3.4.1, March, 2016
- SQL/Services 7.3.2.1, December, 2015
- Oracle Rdb Extension for SQL Developer 7.3.2.0 December, 2015
- Rdb 7.3.1.3, Update 1, October, 2015
- Rdb7.3.1.3, September, 2015

Copyright © 2017, Oracle and/or its affiliates. All rights reserved. |

Rdb 7.2.5.8, May, 2017

- Download from My Oracle Support
  - Patch 26167807 for Itanium
  - Patch 26167817 for Alpha
- Problems fixed in this release include::
  - Unexpected Alignment Faults When Converting Floating Values to Text
  - Unexpected SQL Bugchecks When the Logical RDM$BIND_KODA_DEBUG is Defined
  - Unexpected Bugcheck After an Exception is Reported Inserting LIST OF BYTE VARYING Column
  - Unexpected Bugcheck Generated When NOT LIKE Used With a Literal

Copyright © 2017, Oracle and/or its affiliates. All rights reserved. |

Rdb 7.3 Releases

- V7.3.1 - September 2013
- V7.3.1.1 - February 2014
  - Update 1, OCT, 2014
- V7.3.1.2 - October 2014
  - Update 1, October, 2014
  - Update 2, January, 2015
  - Update 3, February, 2015
- V7.3.1.3 – September, 2015
  - Update 1 – October, 2015
    - This includes the same patches as Update 3 for V7.3.1.2

Copyright © 2017, Oracle and/or its affiliates. All rights reserved. |

Rdb 7.3 Releases (Continued)

- V7.3.2 – March, 2016
  - Update 1, May, 2016
  - Update 2, September, 2016
  - Update 3, November, 2016
  - Update 4, March, 2017
- V7.3.2.1, March, 2017
  - Update 1, June, 2017
  - Update 2, September, 2017

Copyright © 2017, Oracle and/or its affiliates. All rights reserved. |

Sample of Problems Fixed in 7.3.x + Capabilities

- i4 (Poulson)
- Wrong Results
- Alignment Faults
- Bugchecks
- Log Miner
- Performance (Optimizer)
- RMU Show Statistics
- Sorted Ranked Index
  - e.g. Unexpected Bugcheck When Updating a SORTED
- Hot Standby

Copyright © 2017, Oracle and/or its affiliates. All rights reserved. |

Oracle Rdb 7.3.2.1 Available for Download

Patch Details

Patch 25682708: ORACLE RDB RELEASE 7.3.2.1.0 FOR OPENVMS ITANIUM

Last Updated Mar 16, 2017 8:13 AM (7+ hours ago)

Product	Oracle Rdb Server on OpenVMS
Release	RDB 7.3
Platform	HP OpenVMS Itanium

Size	86.6 MB
Download Access	Software
Classification	General
Patch Tag	

Bugs Resolved by This Patch

List of bugs fixed is not available. Consult the Readme.

View Related Knowledge to this Patch

Copyright © 2017, Oracle and/or its affiliates. All rights reserved. |

Rdb 7.3.2.1 New Features and Enhancements

- Optimizer Min Max and Count Optimizations
- Truncate Table Enhancement
- New MEDIAN aggregate function added to SQL
- RMU/RECLAIM
- Error Messages Returned from a Remote Database Engine Can Be Logged
- RMU/SHOW AFTER_JOURNAL [NO]CHECKPOINT Qualifier
- New RMU/BACKUP/AFTER_JOURNAL [NO]SPACE_CHECK Qualifier
- New Options to SET SQLDA Statement
- New RMU Set Statistics Command

Copyright © 2017, Oracle and/or its affiliates. All rights reserved. |

Optimizer Min Max and Count Optimizations

- Optimizer now uses Max lookup, Min lookup, and Count Scan optimizations when more than one MAX, MIN, COUNT occur in the query.
  - select (max(salary_amount) - min(salary_amount)) as salary_range from salary_history
- Previously neither Min key lookup nor Max key lookup would have been used.
- We now eliminate much lookup and cpu usage

Copyright © 2017, Oracle and/or its affiliates. All rights reserved. |

Truncate Table Enhancement

- Fast Logical Area Delete Algorithm
  - Applied with uniform storage areas (for mixed areas we have to walk the area and delete rows one by one)
    - Updates ABM (area bitmap) and SPAM (space management)
    - Leaves record (index or table) in place but marks pages are unused
  - For tables with LoBV columns must walk the table and collect pointers (dbkey) for list of segments
- Customer reported problem when trying to TRUNCATE a table with ½ millions rows and over 4 billion LoBV segments.
  - Performed excessive I/O to the table, RUJ and AIJ. It Never finished!
  - TRUNCATE TABLE must scan the table and erase the LIST column data. In V7.3.2 (or earlier) would exhaust VM (P0) space trying to cache dbkey table

Copyright © 2017, Oracle and/or its affiliates. All rights reserved. |

Truncate Table Enhancement(cont.)

- Revised Algorithm for Tables with LIST OF BYTE VARYING Columns
  - Table, index and list columns mapped to uniform areas now perform minimal I/O
  - The LIST column data is erased without the base table being updated. Therefore, only the LIST column data is written to the recovery journal(.ruj) and after image journal (.aij) files.
- V7.3.2.1 operation is now measured in seconds. Very little VM used.
- Also applied to DROP TABLE and ALTER TABLE ... DROP COLUMN.
- Note: Important the individual columns be mapped to their own (not shared) logical areas

Copyright © 2017, Oracle and/or its affiliates. All rights reserved. |

New Median Function

- This release of Oracle Rdb includes a new statistical function MEDIAN.
- MEDIAN returns the middle value of the set of ordered values for the group. If the number of values is an even number then the result is the linear interpolation between the two middle values. NULL values are excluded from the set of values used by MEDIAN and are not counted.
- Example:
  - SQL> select employee_id, count (*), avg (salary_amount) as avg edit using '-(7)9.9(2)', median (salary_amount) as median from salary_history where employee_id in ('00165', '00188') group by employee_id;

EMPLOYEE_ID		AVG	MEDIAN
00165	12	9313.17	9017.00
00188	2	21093.00	21093.00

2 rows selected

Copyright © 2017, Oracle and/or its affiliates. All rights reserved. |

RMU /Reclaim

- Use to reclaim free space by trimming the LDX and TDX structures on the page that reserve dbkeys
  - NB: DBKEY SCOPE IS ATTACH
- An online command but may abort due to contention
- Can Now Skip to the Next Spam Interval and/or Storage Area to Avoid Lock Contention
- New qualifiers
  - /PAGE_SKIP_LIMIT will abandon area if this % of pages skipped
  - /SPAM_SKIP_LIMIT will abandon area if this % SPAM ranges skipped
  - /RETRY_TIME will retry if we had to abandon a storage area
- Allows better usage online when run in the background

Copyright © 2017, Oracle and/or its affiliates. All rights reserved. |

Engine Error Logging

- This feature allows error messages returned from a database engine on a remote server to be logged. Only non success messages are logged.
  - Several way to enable e.g. Define the logical RDB$RDBSHR_ENGINEERR_LOG "ON"
- Example of an error report:

*** 17-MAY-2016 01:37:24.73: %RDB-E-ENGINEERR, The database engine has returned an error for client 15a250 connection 21 %RDB-F-SYS_REQUEST, error from system services request %RDMS-F-FILACCERR, error opening storage area file DISK1:[DATABASE]JOBS.SNP;1

***** Error while processing RCI_CLASS_REQ

Copyright © 2017, Oracle and/or its affiliates. All rights reserved. |

RMU/SHOW AFTER_JOURNAL [NO]CHECKPOINT Qualifier

- RMU/SHOW AFTER_JOURNAL [NO]CHECKPOINT qualifier can be used to request that all active database processes on all nodes perform a checkpoint
- Purpose is to ensure that all active AIJ operations use the current After Image Journal database symbols values defined in the database root.
  - The checkpoint will only be executed if the RMU/SHOW AFTER_JOURNAL command /BACKUP_CONTEXT qualifier is also specified and the database fast commit to journal feature is currently enabled
  - /Backup_Context qualifier specifies that the following symbols be initialized (RDMAIJ_BACKUP_SEQNO, RDMAIJ_COUNT,RDM$AIJ_CURRENT_SEQNO, RDM$AIJ_ENDOFFILE, RDM$AIJ_FULLNESS, RDM$AIJ_LAST_SEQNO, RDMAIJ_NEXT_SEQNO, RDMAIJ_SEQNO)
  - A global checkpoint will be executed before the global symbols that start with 'RDM$AIJ_' are defined or modified.

Copyright © 2017, Oracle and/or its affiliates. All rights reserved. |

RMU/BACKUP/AFTER_JOURNAL [NO]SPACE_CHECK

- Avoids aborting due lack of space at the backup file creation time or while the backup is in progress
  - A fatal %RMU-F-FILACCERR error is output followed by the RMS-F-FUL error returned by OpenVMS and the backup operation is terminated.
- Based on a snapshot of the current target disk free space
- Examples:

%RMU-F-FILACCERR, error creating AIJ backup file DEVICE:[DIRECTRY]BACKUP_AIJ.AIJBCK;1
-RMS-F-FUL, device full (insufficient space for allocation)

%RMU-F-FILACCERR, error writing to backup file DEVICE:[DIRECTORY]BACKUP_AIJ.AIJBCK;1
-RMS-F-FUL, device full (insufficient space for allocation)

Copyright © 2017, Oracle and/or its affiliates. All rights reserved. |

Rdb 7.3.2.1 Bugs Fixed

- Unexpected Error when Using Multischema Domain Reference
- Unexpected USERNAME Written to After Image Journal for Notational Record
- RMU Unload After_Journal Now Detects Attempt to Unload Vertically Partitioned Table
- DBR Fails to Write START_TAD Record For Logminer
- HANG ON 7.3.2 When Using Translate and UTF8
- Unexpected Query Failure of INVALID_BLR when Using GROUP BY
- New Information Table RDB$SESSION_PRIVILEGES Now Available
- Unexpected COSI-F-VASFULL Error when TRUNCATE Used on Table with LIST Columns

Copyright © 2017, Oracle and/or its affiliates. All rights reserved. |

Rdb 7.3.2.1 Bugs Fixed (cont.)

- Wrong Results from Statistical Functions MAX
- Wrong result in COUNT (expr) Function Using Multi-Segment Index
- Unexpected Bugcheck when Updating a SORTED RANKED Index
- Remote Connections No Longer Does Retry Using Old Protocol

Copyright © 2017, Oracle and/or its affiliates. All rights reserved. |

Rdb 7.3.2.1 Update 1, June, 2017

- Fixed a problem where the distribution of List of Byte Varying (Blob) data across partitioned storage areas was incorrectly favoring the first storage area.
  - The FILL RANDOMLY clause of the LIST storage map would not distribute LIST OF BYTE VARYING columns uniformly.
- Fixed a problem where multiple bugchecks where occurring from SELECT using MIN and MAX functions.
- See MOS Patch 26273409 for Itanium
- See MOS Patch 26273393 for Alpha

Copyright © 2017, Oracle and/or its affiliates. All rights reserved. |

Rdb 7.3.2.1 Update 2, September, 2017

- Unexpected RDB-E-BAD_DPB_CONTENT Error During Database ATTACH
  - Third party application was passing an illegal value in the database parameter block
  - Error was now being caught by Rdb V7.3 and later versions
- Possible Wrong Results From Partitioned Indices
  - From a query when using constant complex value expressions for the selection criteria that matched index columns used for partitioning.
- See MOS Patch 26820763 for Itanium
- See MOS Patch 26820751 for Alpha

Copyright © 2017, Oracle and/or its affiliates. All rights reserved. |

Rdb 7.3.2 Update 4, March, 2017

- Fixed a problem where the distribution of List of Byte Varying (Blob) data across partitioned storage areas was incorrectly favoring the first storage area.
  - The FILL RANDOMLY clause of the LIST storage map would not distribute LIST OF BYTE VARYING columns uniformly.
- See MOS Patch 25800744 for Itanium
- See MOS Patch 25800717 for Alpha

Copyright © 2017, Oracle and/or its affiliates. All rights reserved. |

Rdb 7.3.2, Documentation Update

- Rollup release notes to RDB_NEWFEATURES document
  - Included on each kit (.pdf, .txt, .ps)
  - SYS$HELP:RDB_NEWFEATURES_73xx.PDF
- Rollup new features into documentation
  - Revised SQL Reference Manual ** Released September, 2016!
  - Revised RMU Reference Manual ** Released September, 2016!
- Generated new HELP for RMU and SQL
- New RMU/SHOW LOGICAL support
  - Documents logical names

Copyright © 2017, Oracle and/or its affiliates. All rights reserved. |

Connectivity: Most Recent Releases

- Oracle SQL/Services
- OCI Services for Oracle Rdb
- Oracle ODBC Driver for Rdb
- Oracle JDBC for Rdb
- Oracle Rdb Connectivity Management
- Oracle Rdb Developer Tools for Visual Studio

Copyright © 2017, Oracle and/or its affiliates. All rights reserved. |

Oracle SQL/Services 7.3.2.3, March, 2017

- New and Changed Features for Oracle SQL/Services Client API
  - Sample Application Enhanced to Supply Alternate TCPIP Port
  - The kit is available on MyOracleSupport as patchset numbers 25690909 (HP-UX 64-bit), 25690917 (Linux 32-bit), 25690927 (Linux 64-bit), 25690929 (Microsoft Windows 32-bit) and 25690939 (Microsoft Windows 64-bit).
- New and Changed Features for OCI Services for Oracle Rdb
  - Add SESSION_PRIVS to OCI Services Tables
  - Computed Select Item Names
- Software Errors Fixed in OCI Services for Oracle Rdb
  - Incorrect Values Sometimes Stored in Date Columns
  - Update Across a Dblink ORA-01861: Literal Does Not Match Format String
  - ORA-03115 Returned After an UPDATE...RETURNING Statement
  - Wrong Values Inserted When Using Bind Variables and Scaled Integers
  - Alter Session Set NLS_TIMESTAMP_FORMAT Not Working if Called From Init File

Copyright © 2017, Oracle and/or its affiliates. All rights reserved. |

Oracle ODBC Driver for Rdb 3.3.2.5, April, 2017

- Memory allocation failures and invalid results returned if API call includes the "REMARKS" column
- Incorrect value returned for SQLGetInfo(SQL_FORWARD_ONLY_CURSOR_ATTRIBUTES2)
- SQLGetDiagField (SQL_DIAG_CURSOR_ROW_COUNT) now returns SQL_SUCCESS with a value of -1 instead of SQLError
- SQLGetDiagField no longer returns -100 on record 0
- SQLGetDiagField now returns a 64 bit result as needed for SQL_DIAG_CURSOR_ROW_COUNT and SQL_DIAG_ROW_COUNT

Copyright © 2017, Oracle and/or its affiliates. All rights reserved. |

Oracle ODBC Driver for Rdb – Prior Releases

- 3.3.2.4, October, 2014
- 3.3.2.3, April, 2012
- 3.3.2.2, November, 2011
- 3.3.2.1, April, 2011
- Supported Windows
  - Windows 32bit
    - Windows 7, XP, Vista, Server 2008, Server 2003, 2000,
  - Windows 64bit
    - Windows 7 XP, XP X64, Vista X64, Server 2008 X64, Server 2003 X64

Copyright © 2017, Oracle and/or its affiliates. All rights reserved. |

Oracle JDBC for Rdb 7.3.5, August, 2017

- Download from My Oracle Support
  - Patch 26630544 for Itanium
  - Patch 26630533 for Alpha
- Features
  - JAVA 8.0 support on Integrity Systems
  - Versioned JDBC driver jars
  - Change in SQL/Services JDBC Dispatcher naming
  - Changes to SHIFT_JIS JAVA encodin
- Bug Fixes:
  - Small Memory leak with GetTables()
  - DEFAULTSSL definition not inherited
  - Incorrect value for Client and Executor Free Shared Memory

Copyright © 2017, Oracle and/or its affiliates. All rights reserved. |

ORCM 7.3.2, August, 2017

- Download from My Oracle Support
  - Patch 26667279 for Windows
  - Patch 26667304 for Generic Kit
- Features
  - New RMU Menu category
  - RMU Statistics
  - Find Schema Differences
  - External Tool Enhancements
- Bug Fixes:
  - Small Memory leak with GetTables()
  - DEFAULTSSL definition not inherited
  - Incorrect value for Client and Executor Free Shared Memory

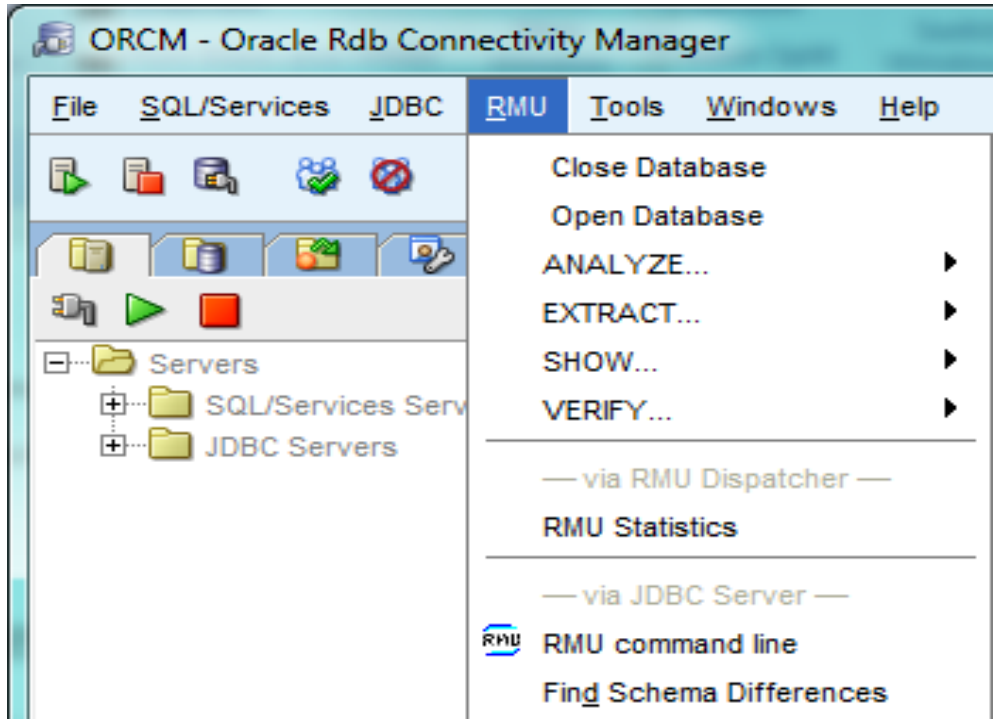

Copyright © 2017, Oracle and/or its affiliates. All rights reserved. |

Oracle Rdb Developer Tools for Visual Studio

- 7.3.4, June, 2015
  - Available for download from My Oracle Support
    - Patch 21313157
    - Also available on OTN at: http://www.oracle.com/technetwork/database/database-technologies/rdb/downloads/othersoft-087176.html.
  - Features:
    - Visual Studio 2015, 2013 Integration
    - Entity Framework 6 Supported
    - Entity Framework fluent API Supported

Copyright © 2017, Oracle and/or its affiliates. All rights reserved. |

Other Oracle Rdb Family Products: Latest Versions

- Oracle CDD/Repository
- Oracle Rdb Extension for SQL Developer

Copyright © 2017, Oracle and/or its affiliates. All rights reserved. |

Oracle CDD/Repository 7.2.0.6.0, July, 2015

- Available on My Oracle Support
  - Patch 21488004 for Itanium
  - Patch 21488027 for Alpha.
- Problems Fixed:
  - Problem when changing a relation with constraints when on OpenVMS 8.4-1H1 Systems.

Copyright © 2017, Oracle and/or its affiliates. All rights reserved. |

Oracle Rdb Extension for SQL Developer Release 7.3.2.0, December, 2015

- Download from My Oracle Support
  - Patch 22294391
- Features
  - Allows you to run with SQL Developer 4.1.2
- Requirements:
  - Oracle JDBC for Rdb release 7.3.4.0.4

Copyright © 2017, Oracle and/or its affiliates. All rights reserved. |

Oracle Rdb: What's Under Development

Copyright © 2017, Oracle and/or its affiliates. All rights reserved. |

Oracle Rdb 7.3.3

- Functional release
- Changes are the focus of Ian’s first talk

Copyright © 2017, Oracle and/or its affiliates. All rights reserved. |

Database Vault

- Changes the way Rdb handles OpenVMS privileges
- `ALTER DATABASE …`
  `DATABASE VAULT IS ENABLED;`
- Requires SECURITY privilege to enable
- No longer inherit overrides from current system user
- *WARNING* Ensure there is a SECURITY user defined in the database because once DATABASE VAULT is enabled you can not use a OpenVMS privilege to change it externally

Copyright © 2017, Oracle and/or its affiliates. All rights reserved. |

Oracle SQL/Services and OCI Services 7.3.3.0

- Support for Oracle 11g Libraries and Oracle 11g Oracle Net Protocol
- OCI Authentication Today
  - Currently users are defined in the USER$ table
  - We store an encoded password (different encoding to that used by OpenVMS and LDAP servers)
  - This password is used to authenticate with the Oracle server
  - RDB$NATCONN_CUPP Utility used to add, modify, remove, and show users enabled for OCI access and to sync with updated VMS passwords
- OCI Authentication with LDAP
  - Specify the password "GLOBAL", indicates (as it does for Oracle users) that authentication will be done using LDAP
  - Users with the password "GLOBAL" in the USER$ table will be authenticated using the LDAP directory defined in LDAPACME$INIT, the same LDAP directory used by Rdb for external authentication

Copyright © 2017, Oracle and/or its affiliates. All rights reserved. |

Oracle CDD/Repository 7.3.0

- Customer Driven Enhancements
  - Adding Rdb SQL Features not Previously Supported:
    - Can now integrate into CDD a database that has been prepared for OCI Services
    - Coalesce
      - returns the first non-NULL value from a series of value expressions; otherwise, returns NULL
    - Other capabilities to be added based on demand

Copyright © 2017, Oracle and/or its affiliates. All rights reserved. |

Oracle CODASYL DBMS 7.3.2.0 – New Features

- New /FLUSH_INTERNAL qualifier for DBO/SHOW STATISTICS
- Updated DBO/HELP
- New DML syntax for IEEE S-FLOAT and T-FLOAT
- Add /UNTIL to DBO/CHECKPOINT command
- /[NO]EXPORT_STATISTICS for DBO/CLOSE.
- ADD /ATTRIBUTES for DBO/MOVE and DBO/COPY
- Remove DBMS LMF checks from KITINSTAL.COM
- NEW /NOAFTER_JOURNAL qualifier on DBO/RECOVER
- DBO/RECOVER Feature to Alter Storage Area, AIJ and Row cache Directories
- DBO/RECLAIM Can Now Skip to the Next Spam Interval
- DBO/SHOW LOGICAL_NAME now supports /DESCRIPTION qualifier

Copyright © 2017, Oracle and/or its affiliates. All rights reserved. |

Oracle CODASYL DBMS 7.3.2.0 - New Features (cont.)

- DBO/SET SHARED_MEMORY/SECTION_NAME

Copyright © 2017, Oracle and/or its affiliates. All rights reserved. |

Oracle CODASYL DBMS 7.3.2.0 – Bug Fixes

- Fix DBO/VERIFY IA64 alignment faults.
- Bugcheck at DIOFETCH$FETCH_SNAP_SEG
- DBMDBRBUG Bugcheck at RUJUTL$BIJBL_GET_FORWARD + 1E0
- DBO/SHOW STATISTICS Playback Zeroed Final Transaction Duration
- Field help missing for some DBO/SHOW Statistics fields
- Possible Misleading Messages From DBO/RECOVER/JUST_CORRUPT
- DBO/BACKUP/MULTITHREAD Did Not Output the VMS RMS STV Status for Errors Opening Storage Areas
- Lack of LRS reply status on HOT STANDBY shutdown
- Master ALS Restart Does Not Resume Updating Standby Database
- RMU/RECOVER Bugcheck Dump Caused by OpenVMS SYSTEM-W-NONLOCAL
- MONITOR BUGCHECKS WHEN RUNNING DBO/CLOSE/STAT=EXPORT

Copyright © 2017, Oracle and/or its affiliates. All rights reserved. |

Oracle Message Queue Update

- OMQ 5 on OpenVMS 8.4-2 (IA) Certified (August, 2016)
- See http://docs.oracle.com/cd/E17973_01/platforms/mqplatforms/mqplats/mqplats.html#wp1087062

Copyright © 2017, Oracle and/or its affiliates. All rights reserved. |

Copyright © 2017, Oracle and/or its affiliates. All rights reserved. |

Training Partner List

- **Europe, Asia, Middle East and Africa**
  - VX Company
    Baarn, The Netherlands
    http://www.vxcompany.com/rdbtrainingcourses
- **Americas**
  - JCC Consulting, Inc.
    Granville, Ohio, United States
    http://www.jcc.com/
- **Oracle CODASYL DBMS Worldwide**
  - Software Concepts International
    Nashua, New Hampshire, United States
    http://www.sciinc.com/

Copyright © 2017, Oracle and/or its affiliates. All rights reserved. |

ORACLE®